File No.	353LC01227	SHEET	1/1

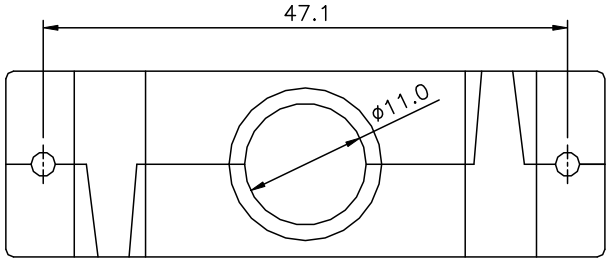

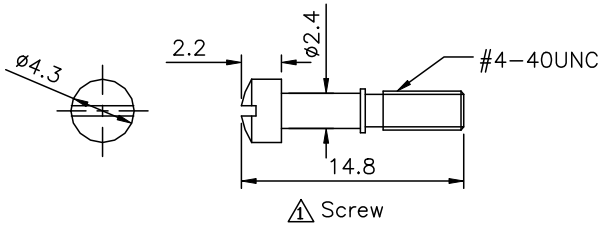

1 SPECIFICATION
Insulator:ABS(UL94HB)
Screw:Steel,Nickel Plated
SR:ABS
RoHS Compliant

1 DQ 25 X - X - H
(1) (2) (3) (4) (5)

(1) DQ:D-SUB Quick-On Plastic Hood
(2) 25:No. Of Position
(3) X:D-SUB Hood Insulator Color
B:Beige
C:Chromate Plated
G:Gray
K:Black
(4) X:Packing Option
Blank:Bulk Packing
1:One Set/Bag
(5) H:RoHS Compliant

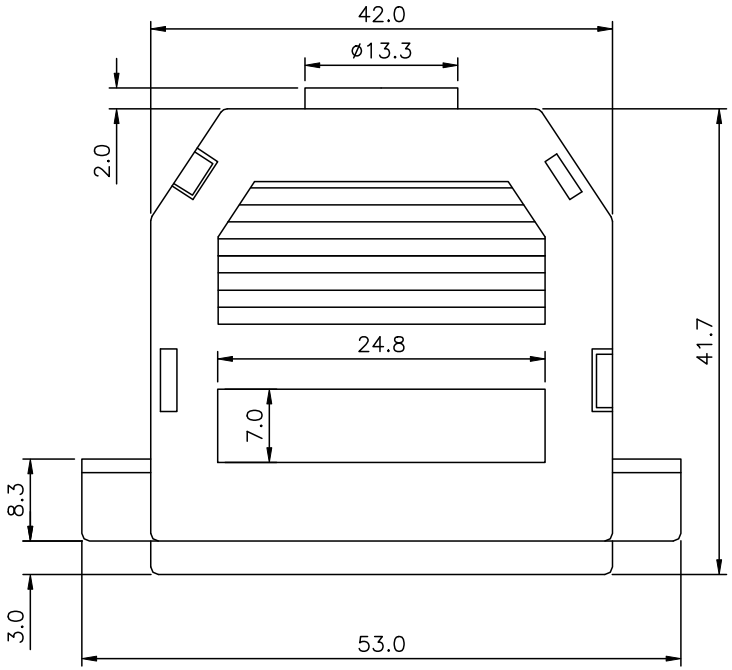

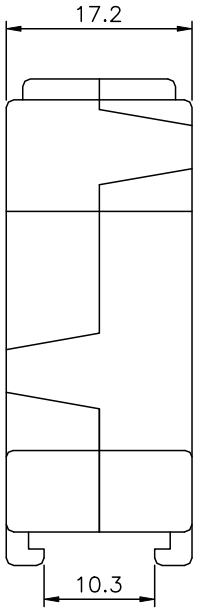

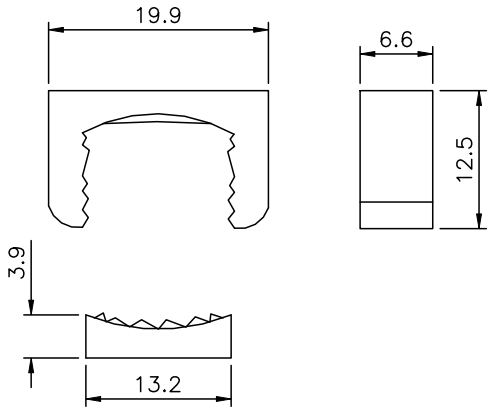

PROPRIETARY AND CONFIDENTIAL
THE INFORMATION CONTAINED IN THIS DRAWING IS THE SOLE PROPERTY OF AUK AND SHALL NOT BE DISTRIBUTED, REPRODUCED, OR DISCLOSED IN WHOLE OR IN PART WITHOUT PRIOR WRITTEN PERMISSION OF AUK.

A MEMBER OF AUK GROUP
太聯事業股份有限公司
AUK CONTRACTORS CO., LTD.

CATEGORY		APPROVED BY	MEI
PART No. 1	DQ25X-X-H	CHECKED BY	HZF
DRAWING No.	DQ25X-X-H	DRAWING BY	CYP
SCALE	NONE	REV.	B1

UNLESS OTHERWISE SPECIFIED TOLERANCES ARE
X. ±0.5
.X ±0.3
.XX ±0.2
ANG. ±5°
UNIT mm

NO.	REV.	REVISIONS	CHK	DATE
1	B1	Modify P/N:DQ25X-1-H -->DQ25X-X-H	HZF	03/01/2021
0	B0	NEW RELEASE	HZF	05/24/2017