File No.	439NI13801	SHEET	1/1

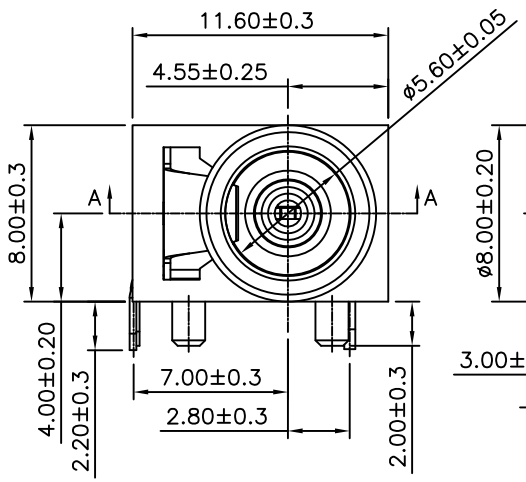

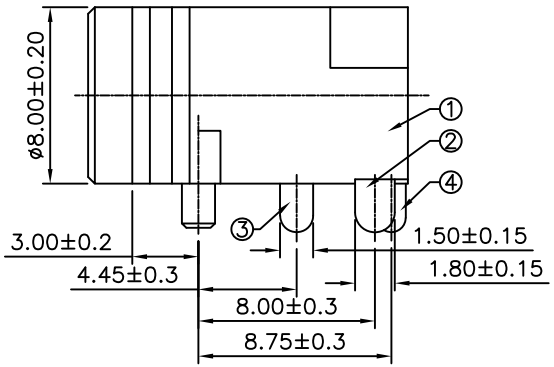

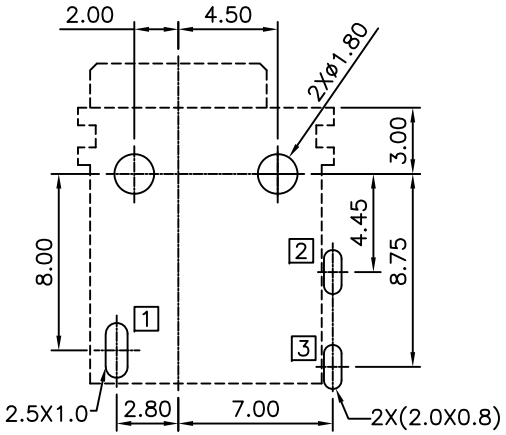

Recommended P.C.B. Layout(Top View)
Thickness=1.60mm(Tolerance:±0.05)

⚠1 SPECIFICATION

Rating:DC 36V 7A
Contact Resistance:30 Milliohms Max.
After Test:50 Milliohms Max.
Insulation Resistance:100 Megaohms Min.
At 500V DC
After Test:50 Megaohms Min.
Withstand Voltage:500V AC
Operation Temperature Range:−20°C~80°C
RoHS Compliant

⚠1 DCJ R 10 − 40 − RP −R5H− H H
(1) (2) (3) (4) (5) (6) (7) (8)

(1) DCJ:DC Power Jack DIP Right Angle
(2) R:Right Type
(3) 10:Pin Diameter
(4) 40:Center Height=4.0mm
(5) RP:B Type(With Female Pin)
(6) R5H:Tape & Reel 500Pcs/Reel
(7) H:Withstand High Temperature Soldering
(8) H:RoHS Compliant

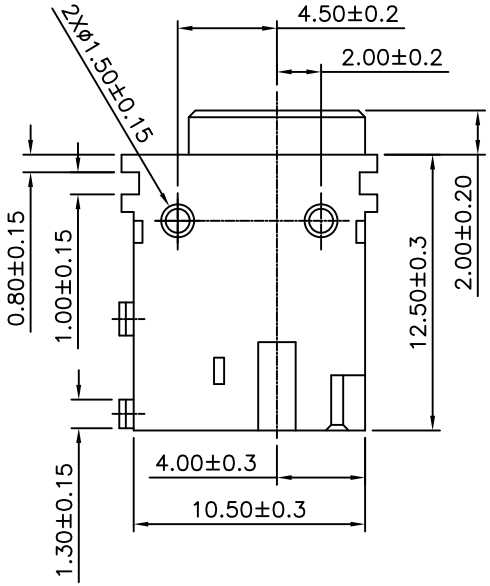

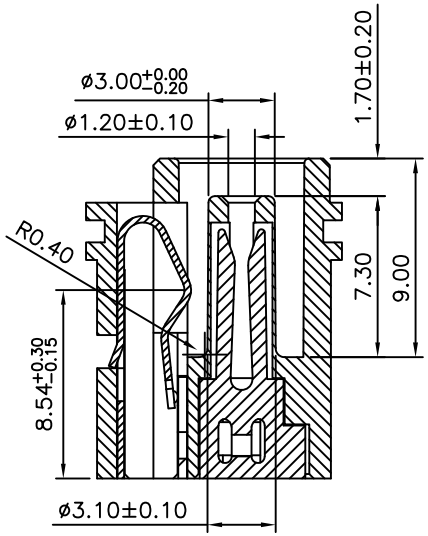

Section A–A

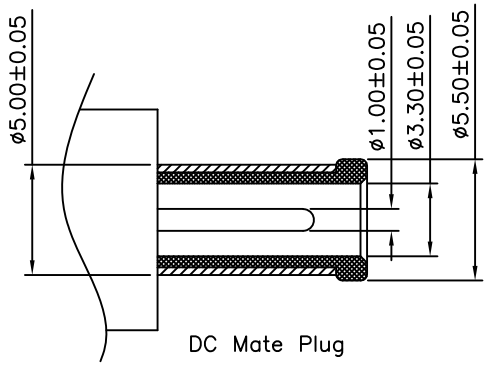

DC Mate Plug

Schematic

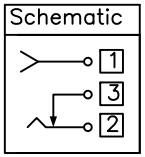

Circuit Diagram □:Terminal No.

No.	Description		Q'ty	Material	Remark
④	Shunt Terminal	3	1	Brass	Tin Plated
③	Tip Spring	2	1	Phosphor Bronze	Tin Plated
②	Center Pin	1	1	Phosphor Bronze	Tin Plated
①	Housing		1	PA9T	Black

PROPRIETARY AND CONFIDENTIAL
THE INFORMATION CONTAINED IN THIS DRAWING IS THE SOLE PROPERTY OF AUK AND SHALL NOT BE DISTRIBUTED, REPRODUCED, OR DISCLOSED IN WHOLE OR IN PART WITHOUT PRIOR WRITTEN PERMISSION OF AUK.

A MEMBER OF AUK GROUP
太聯事業股份有限公司
AUK CONTRACTORS CO., LTD.

CATEGORY		APPROVED BY	MEI
PART No. ⚠1 DCJR10-40-RP-R5H-HH		CHECKED BY	HZF
DRAWING No. DCJR10-40-RP-R5H-HH		DRAWING BY	CYP
SCALE	NONE	REV.	A1

UNLESS OTHERWISE SPECIFIED TOLERANCES ARE
.X ±0.50 X.° ±5°
.XX ±0.30 .X° ±3°
.XXX ±0.15 .XX° ±2°
UNIT mm

NO.	REV.	REVISIONS	CHK	DATE
⚠1	A1	Modify D/N:DCJR10-40-PR-R5H-HH --> DCJR10-40-RP-R5H-HH	HZF	09/13/2023
⚠0	A0	NEW RELEASE	HZF	01/02/2021