File No.	555LE25806	SHEET	1/1

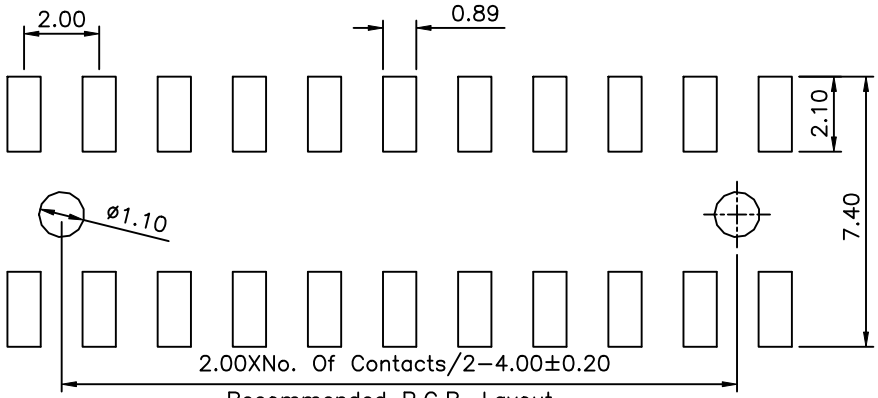

Recommended P.C.B. Layout
Tolerance:±0.05

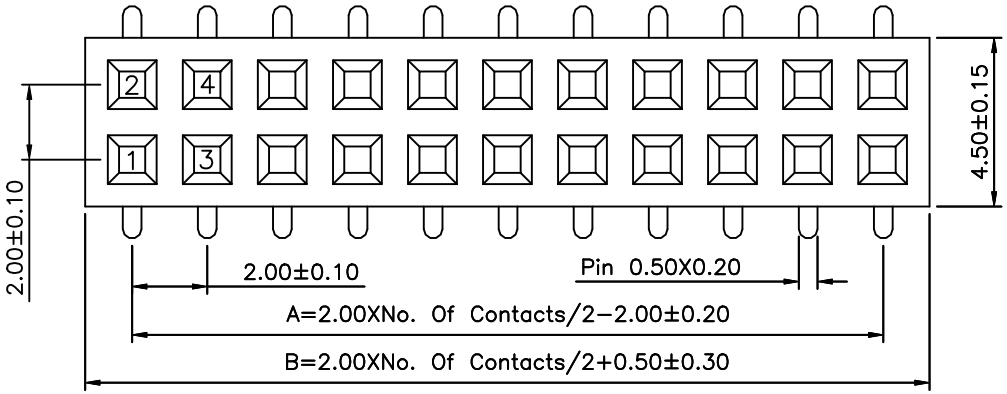

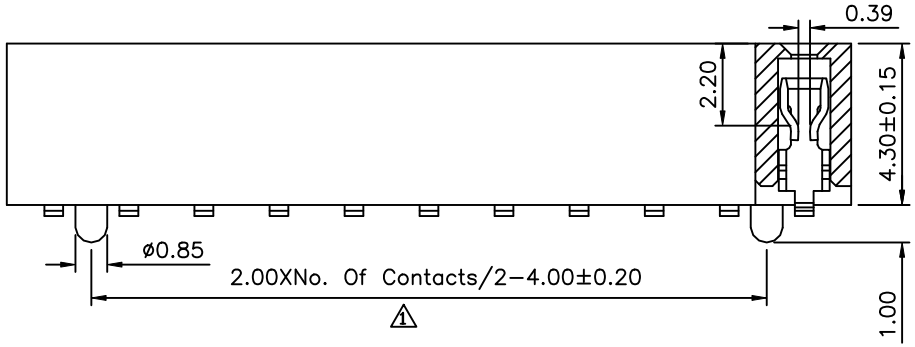

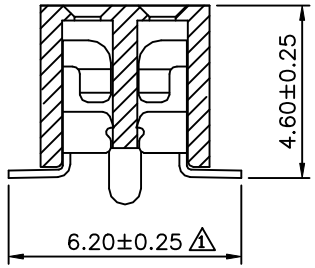

SPECIFICATION

Current Rating:1.5 Amp
Withstand Voltage:500V AC/Minute
Contact Resistance:20 Milliohms Max.
Insulation Resistance:1000 Megaohms Min.
Operation Temperature:−40°C~+105°C
Housing:PA6T+30%G.F.(UL94V−0),Black
Contact:Phosphor Bronze,Gold Flash Over Nickel
RoHS Compliant

S V P 46 − 2 X XX − H
(1) (2) (3) (4) (5) (6) (7)

(1) S:2.0mm Female Header
(2) V:SMT Straight
(3) P:With Post
(4) 46:4.6mm Total Height
(5) 2:Dual Row
(6) XX:No. Of Position/Per Row
(7) H:RoHS Compliant

Pin	A	B	Pin	A	B
04	2.00	4.50	44	42.00	44.50
06	4.00	6.50	46	44.00	46.50
08	6.00	8.50	48	46.00	48.50
10	8.00	10.50	50	48.00	50.50
12	10.00	12.50	52	50.00	52.50
14	12.00	14.50	54	52.00	54.50
16	14.00	16.50	56	54.00	56.50
18	16.00	18.50	58	56.00	58.50
20	18.00	20.50	60	58.00	60.50
22	20.00	22.50	62	60.00	62.50
24	22.00	24.50	64	62.00	64.50
26	24.00	26.50	66	64.00	66.50
28	26.00	28.50	68	66.00	68.50
30	28.00	30.50	70	68.00	70.50
32	30.00	32.50	72	70.00	72.50
34	32.00	34.50	74	72.00	74.50
36	34.00	36.50	76	74.00	76.50
38	36.00	38.50	78	76.00	78.50
40	38.00	40.50	80	78.00	80.50
42	40.00	42.50			

PROPRIETARY AND CONFIDENTIAL
THE INFORMATION CONTAINED IN THIS DRAWING IS THE SOLE PROPERTY OF AUK AND SHALL NOT BE DISTRIBUTED, REPRODUCED, OR DISCLOSED IN WHOLE OR IN PART WITHOUT PRIOR WRITTEN PERMISSION OF AUK.

AUK
A MEMBER OF AUK GROUP
太聯事業股份有限公司
AUK CONTRACTORS CO., LTD.

CATEGORY		APPROVED BY	MEI
PART No.	SVP46−2XXX−H	CHECKED BY	HZF
DRAWING No.	SVP46−2XXX−H	DRAWING BY	CYP
SCALE	NONE	REV.	A1

UNLESS OTHERWISE SPECIFIED TOLERANCES ARE
.X ±0.30
.XX ±0.20
UNIT mm

NO.	REV.	REVISIONS	CHK	DATE
1	A1	Modify Data	HZF	05/24/2021
0	A0	NEW RELEASE	HZF	10/03/2014